Laddomat 21-60
Spare parts list

LADDOMAT®

Termoventiler AB
Nolhagavägen 12
SE-523 93 MARBÄCK
Tel +46 (0) 321 - 261 80 info@termoventiler.se
Fax +46 (0) 321 - 261 89 www.termoventiler.eu

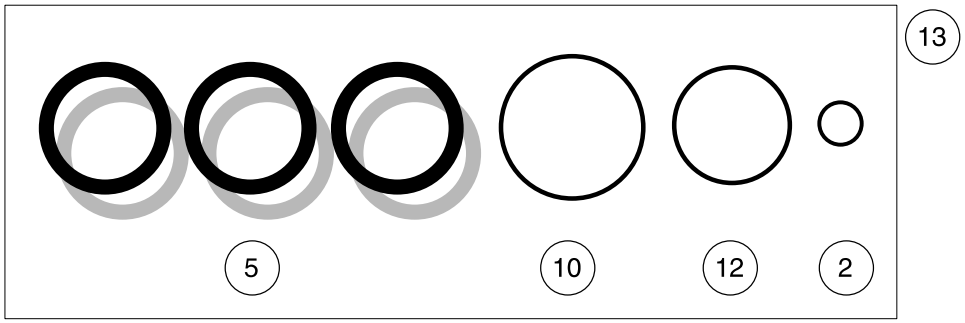

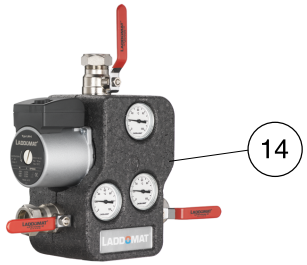

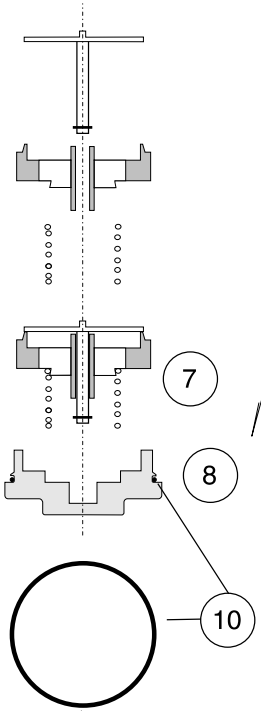

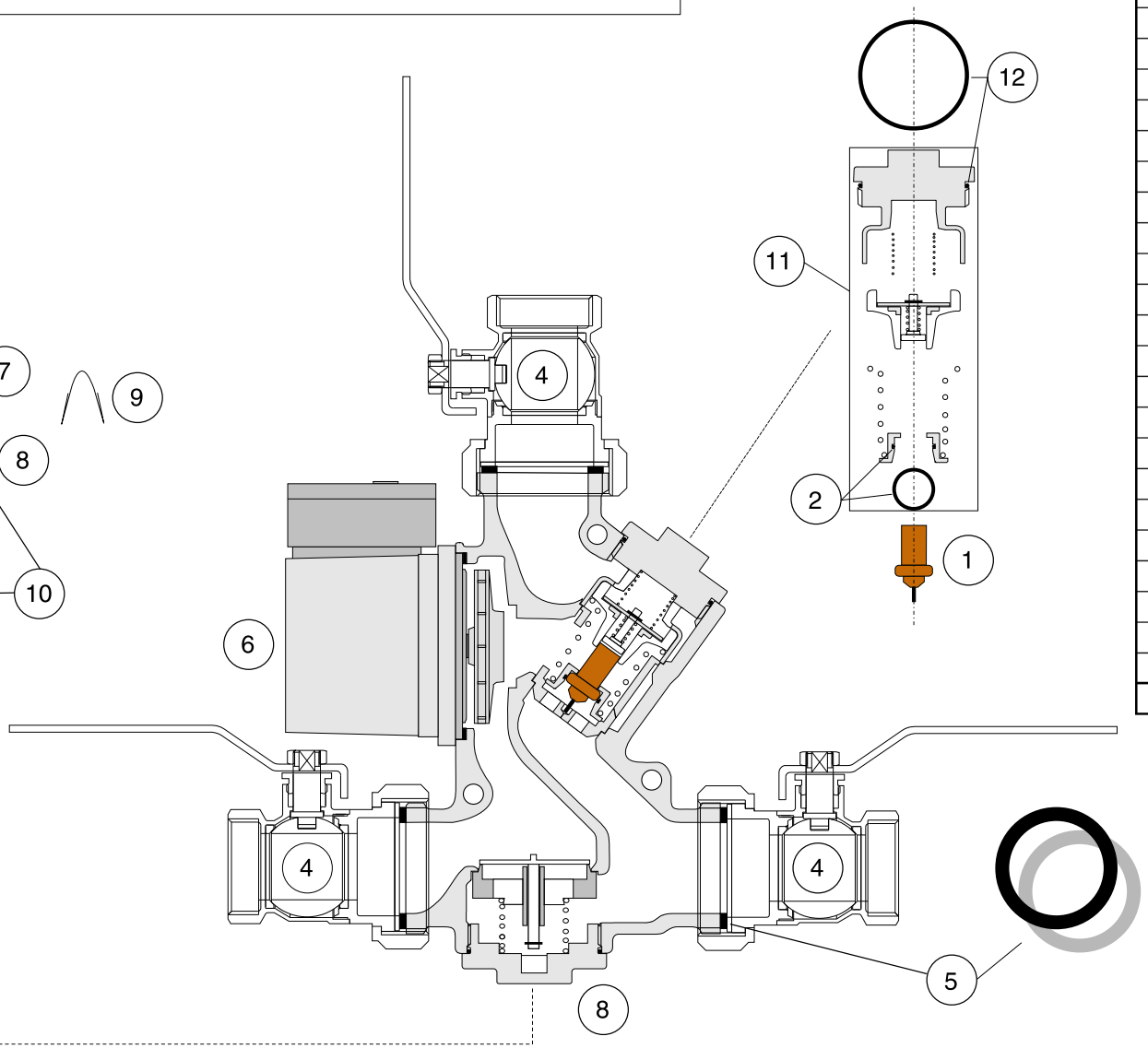
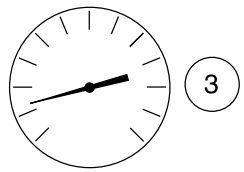
Pos	Part no.	Description
1	110053	Thermostatic element 5840, 53°C
1	110057	Thermostatic element 8749, 57°C
1	110063	Thermostatic element 5839, 63°C
1	110066	Thermostatic element 1240, 66°C
1	110072	Thermostatic element 8719, 72°C
1	110078	Thermostatic element 1456, 78°C
1	110083	Thermostatic element 1467, 83°C
1	110087	Thermostatic element 8222, 87°C
2		O-ring 17,1x1,6, for thermo. element
3	383004	Thermometer
4	141015	Ball valve R40-Cu28, with lever, incl. gasket
4	141301	Ball valve R40-R32, with lever, incl. gasket
5a		Flat gasket, R40
5b		Flat gasket FIBRE, R40
6a	146035	Pump Laddomat LM6
6b	146044	Pump Laddomat LM6A, ErP 2015
7	212602	Check Valve LM21-60, complete with spring
8	412116	Check valve cover, LM21-60
9	452105	Blocking clip for check valve
10		O-ring 31,42*2.62 epdm, for CV-cover LM21-60
11	212108	Regulation kit LM21-60/100
12		O-ring 44,12*2.62 epdm for cover
13	110004	Gasket set for LM21-60
14	164002	EPP-insulation for LM21-60